MODEL: EVE636SC

EX. VIEW DRAWING 7724
FRONT FRAME ASSEMBLY

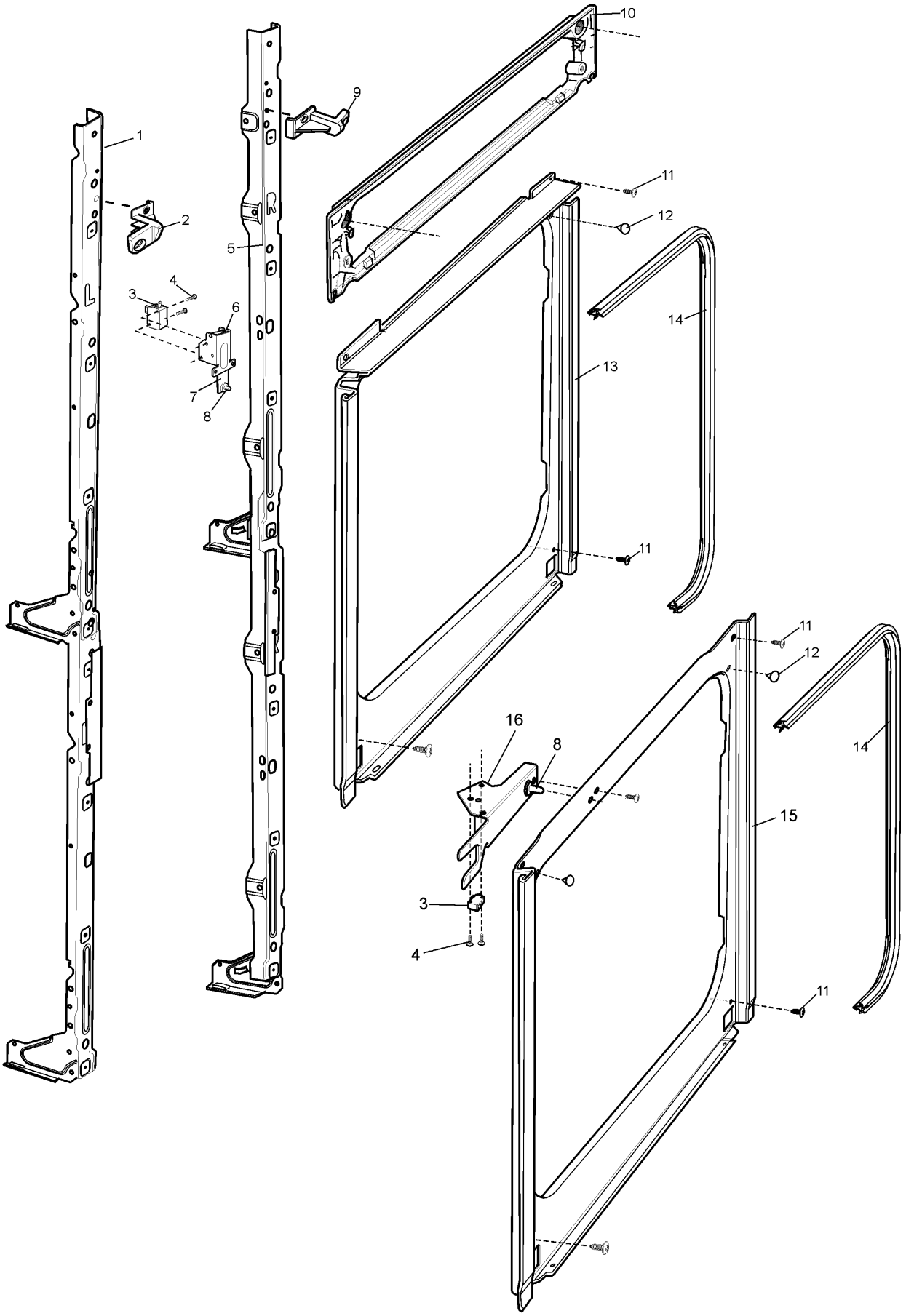

MODEL: EVE636SC

EX. VIEW DRAWING 7723
UPPER OVEN ASSEMBLY

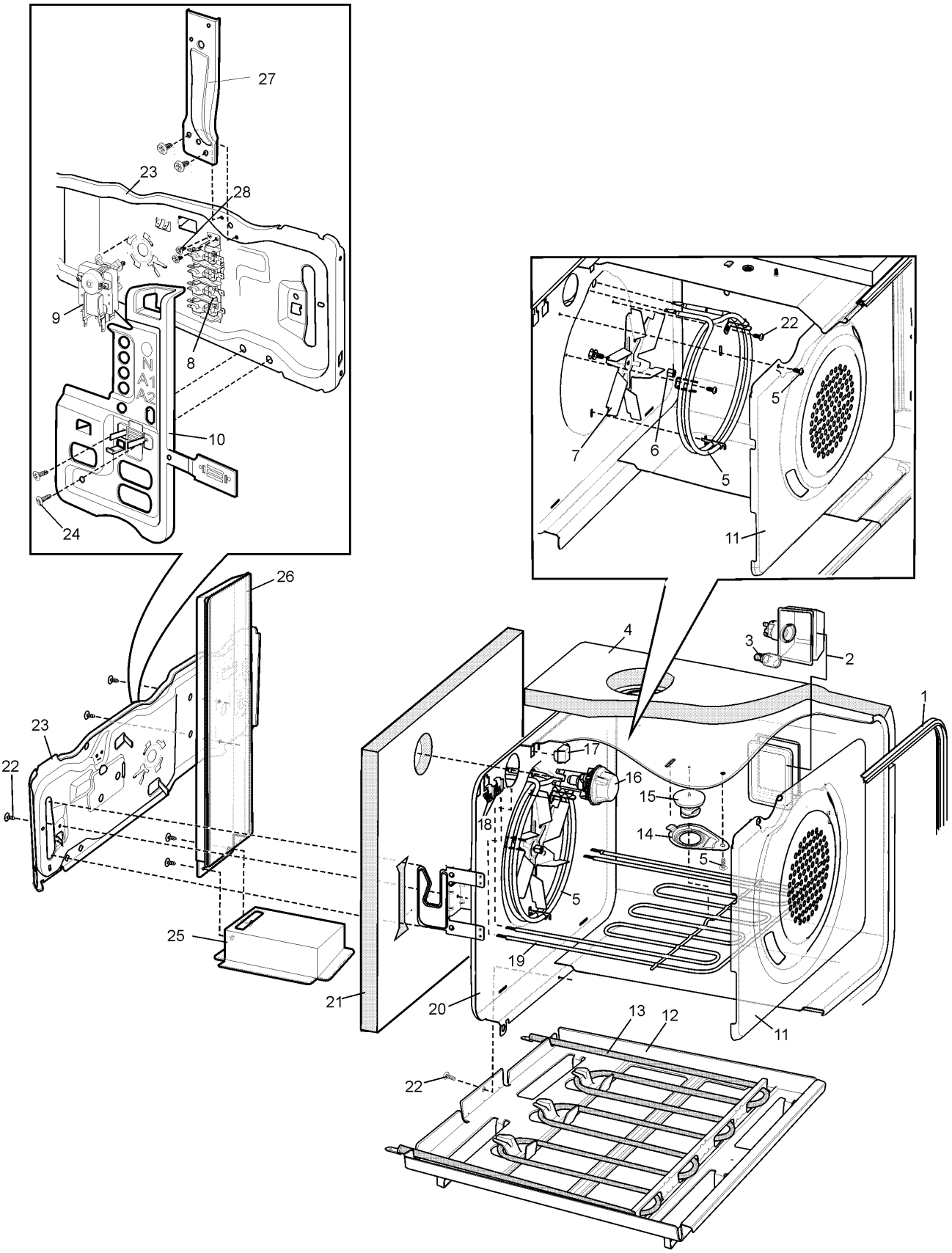

MODEL: EVE636SC

EX. VIEW DRAWING 7721
CHASSIS ASSEMBLY

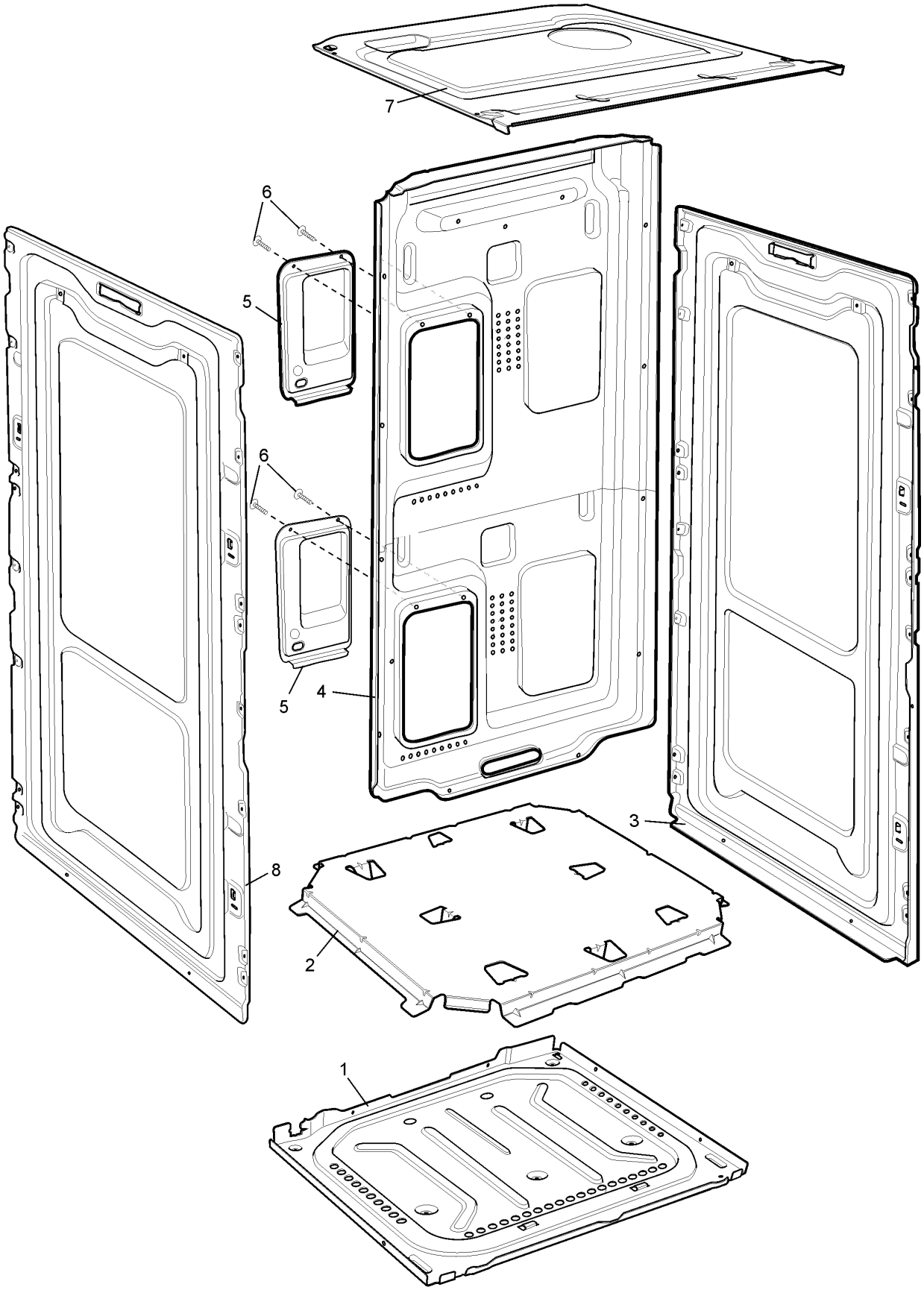

MODEL: EVE636SC

EX. VIEW DRAWING 8085
CONTROL PANEL ASSEMBLY

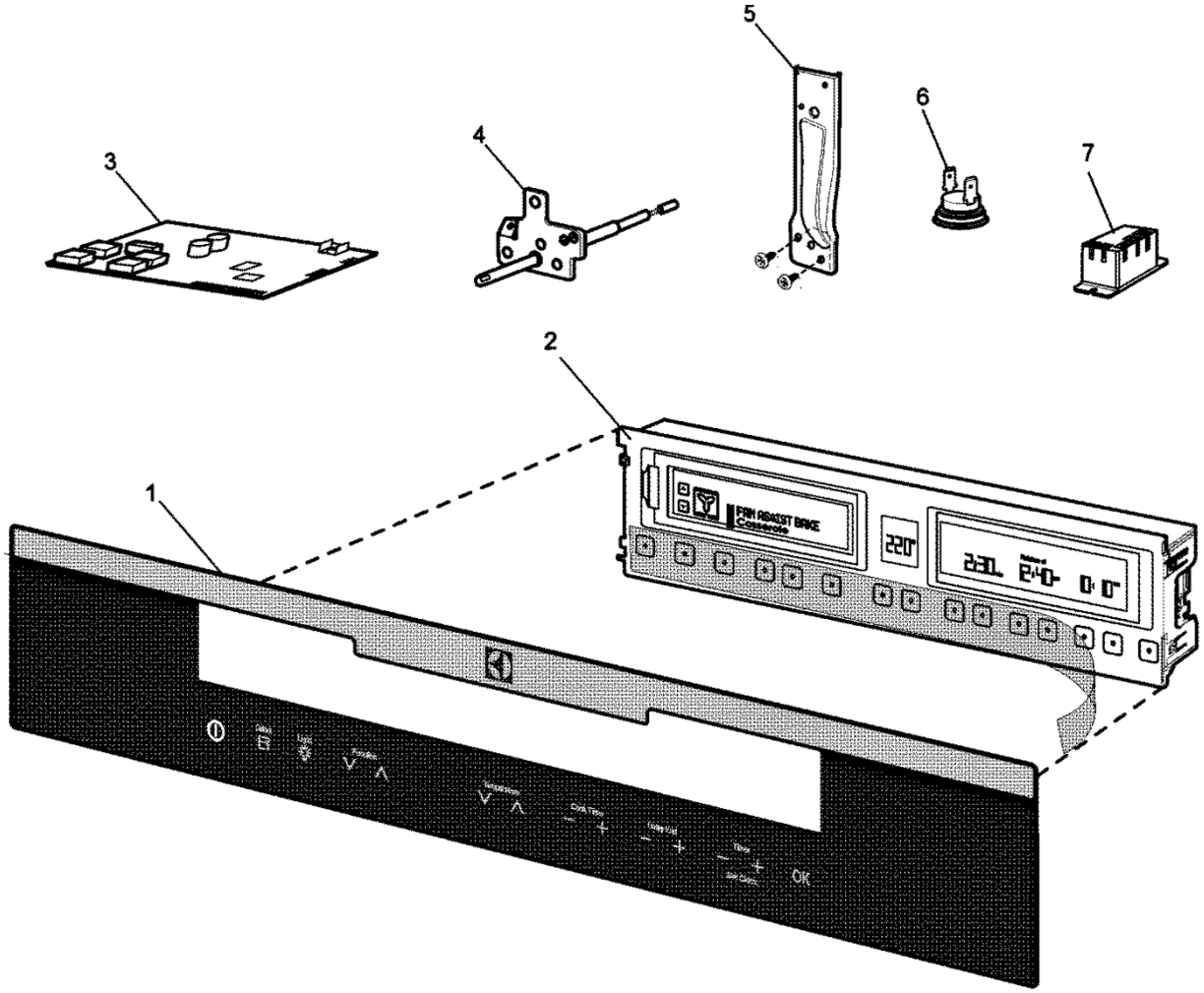

MODEL: EVE636SC

EX. VIEW DRAWING 7602
PANEL DECK ASSEMBLY

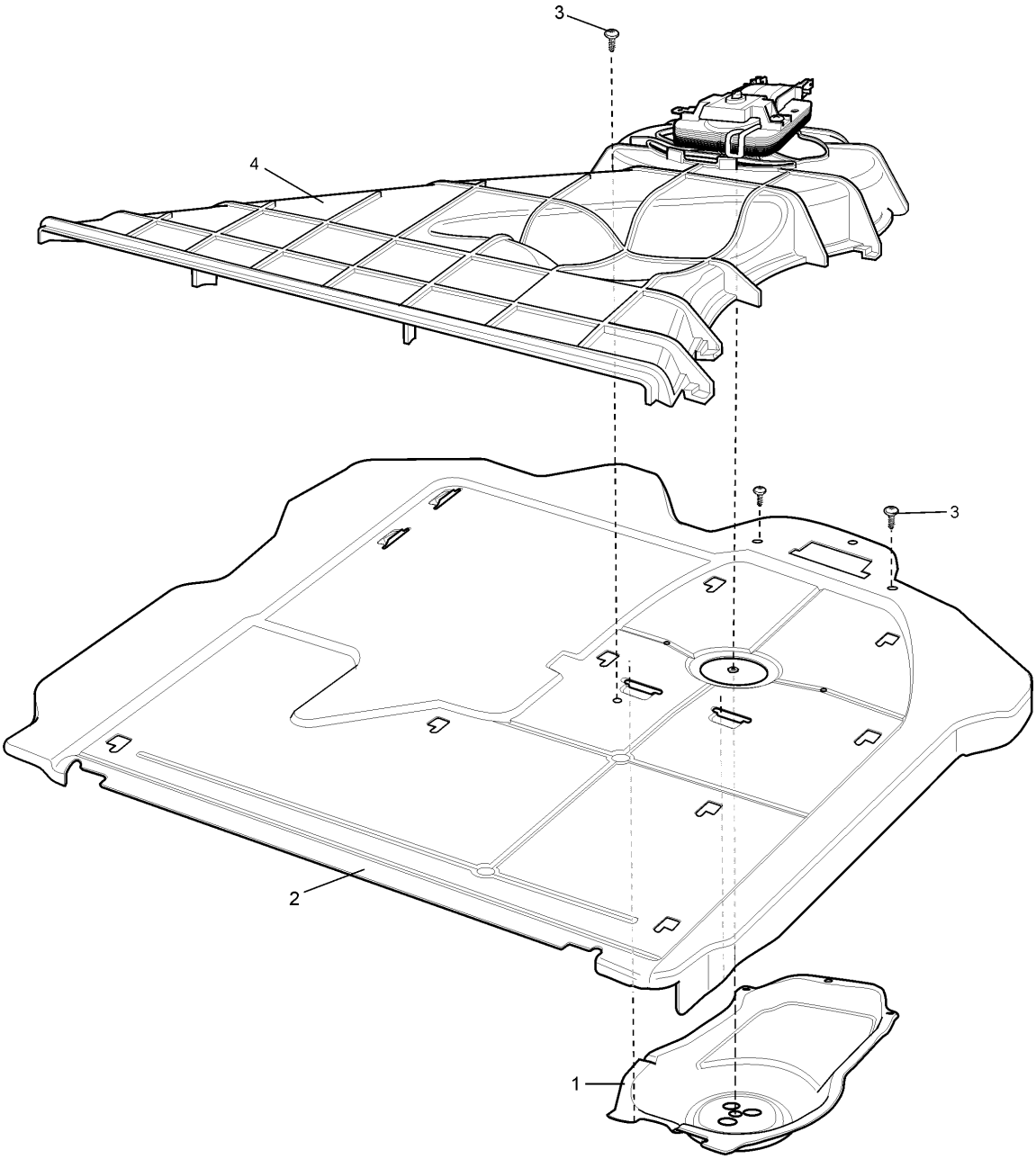

MODEL: EVE636SC

EX. VIEW DRAWING 8051
OVEN DOOR ASSEMBLY

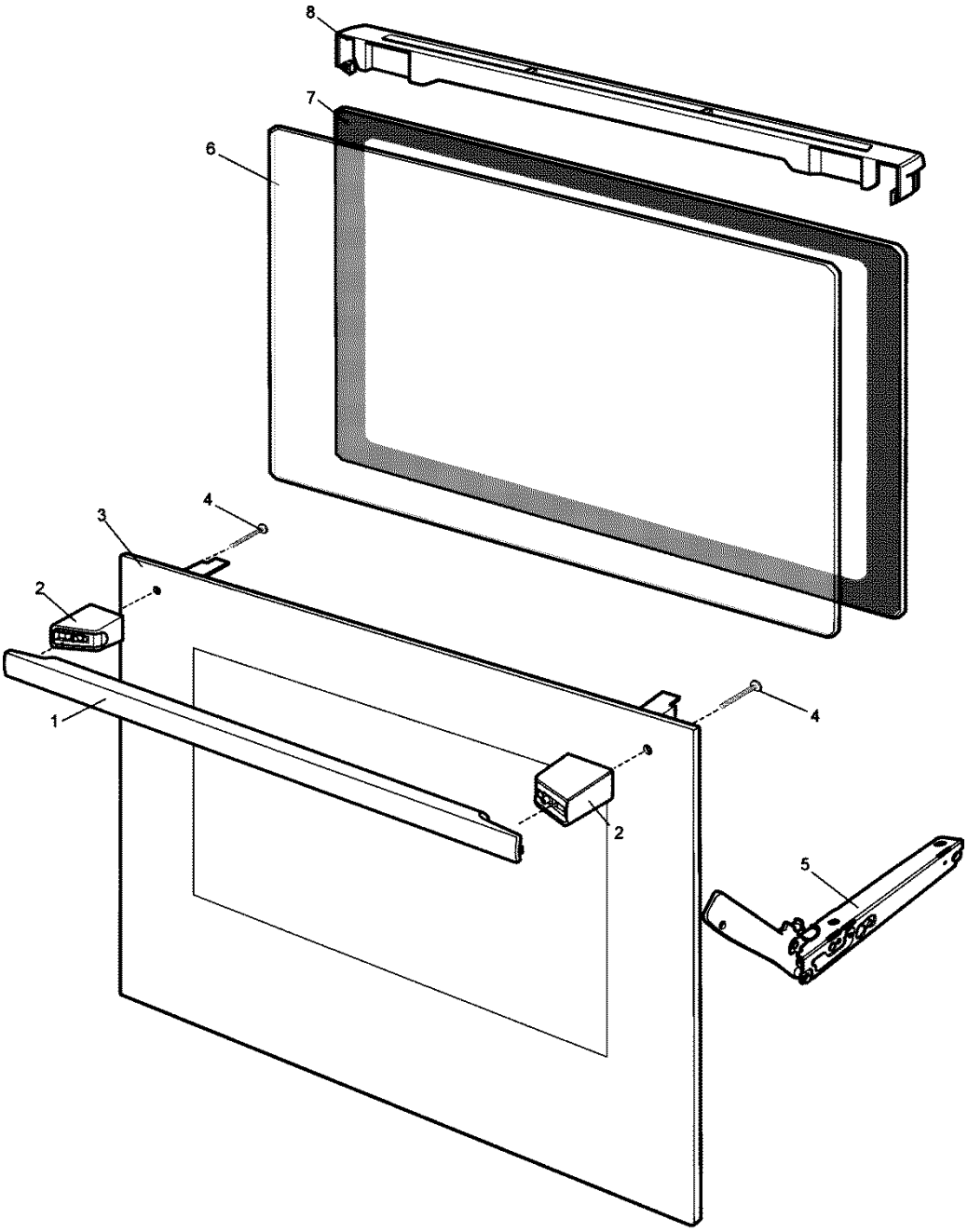

MODEL: EVE636SC

EX. VIEW DRAWING 8051
OVEN DOOR ASSEMBLY

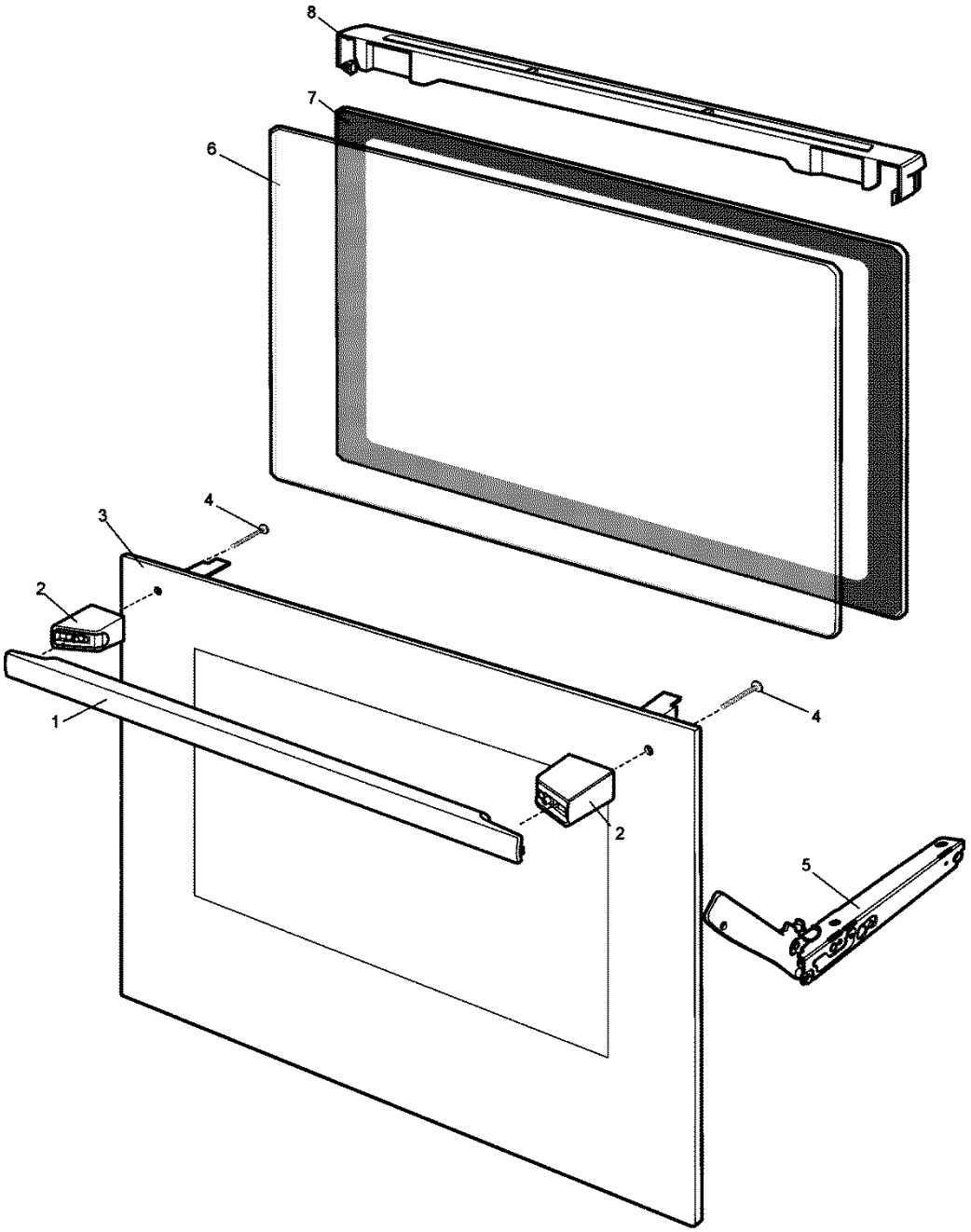

MODEL: EVE636SC

EX. VIEW DRAWING 8310
INTERNAL PACK

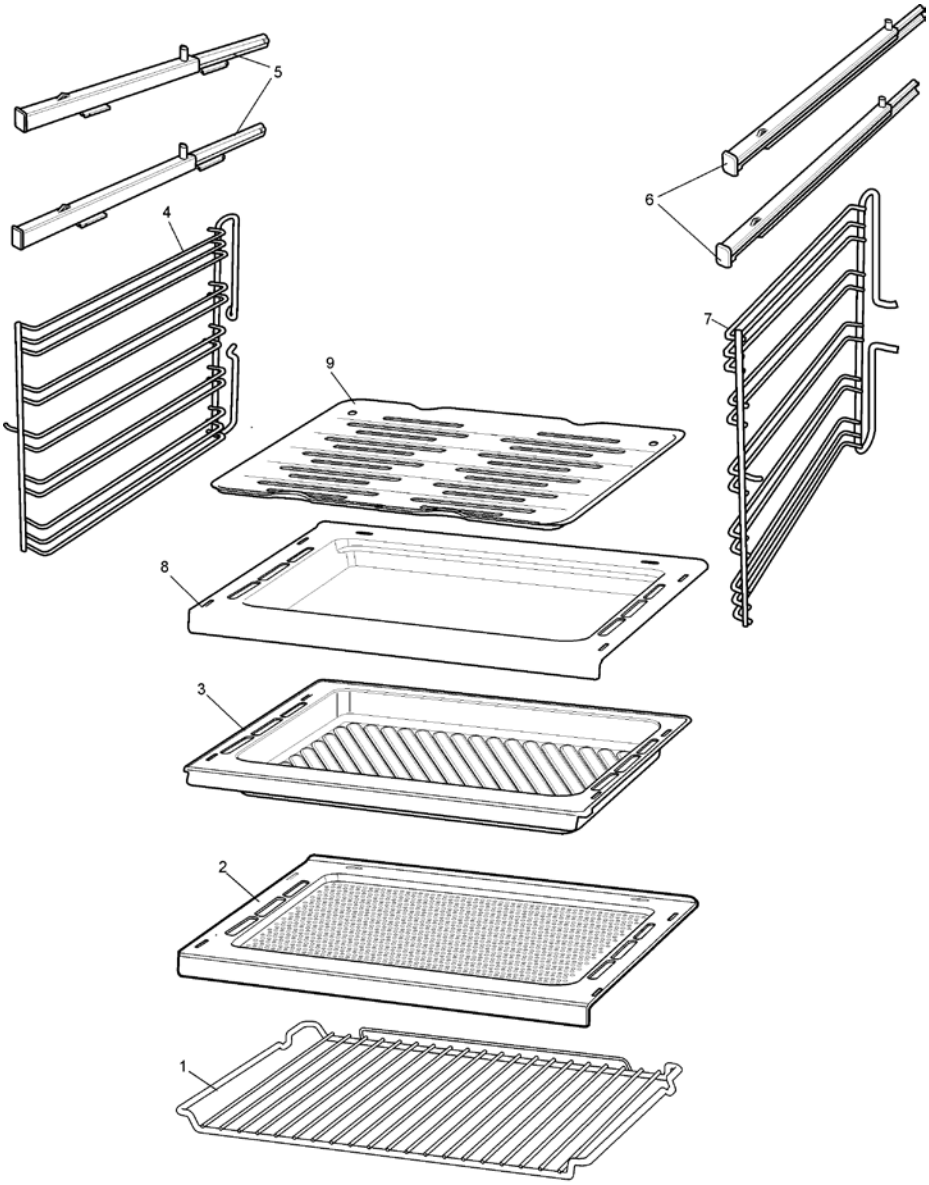

MODEL: EVE636SC
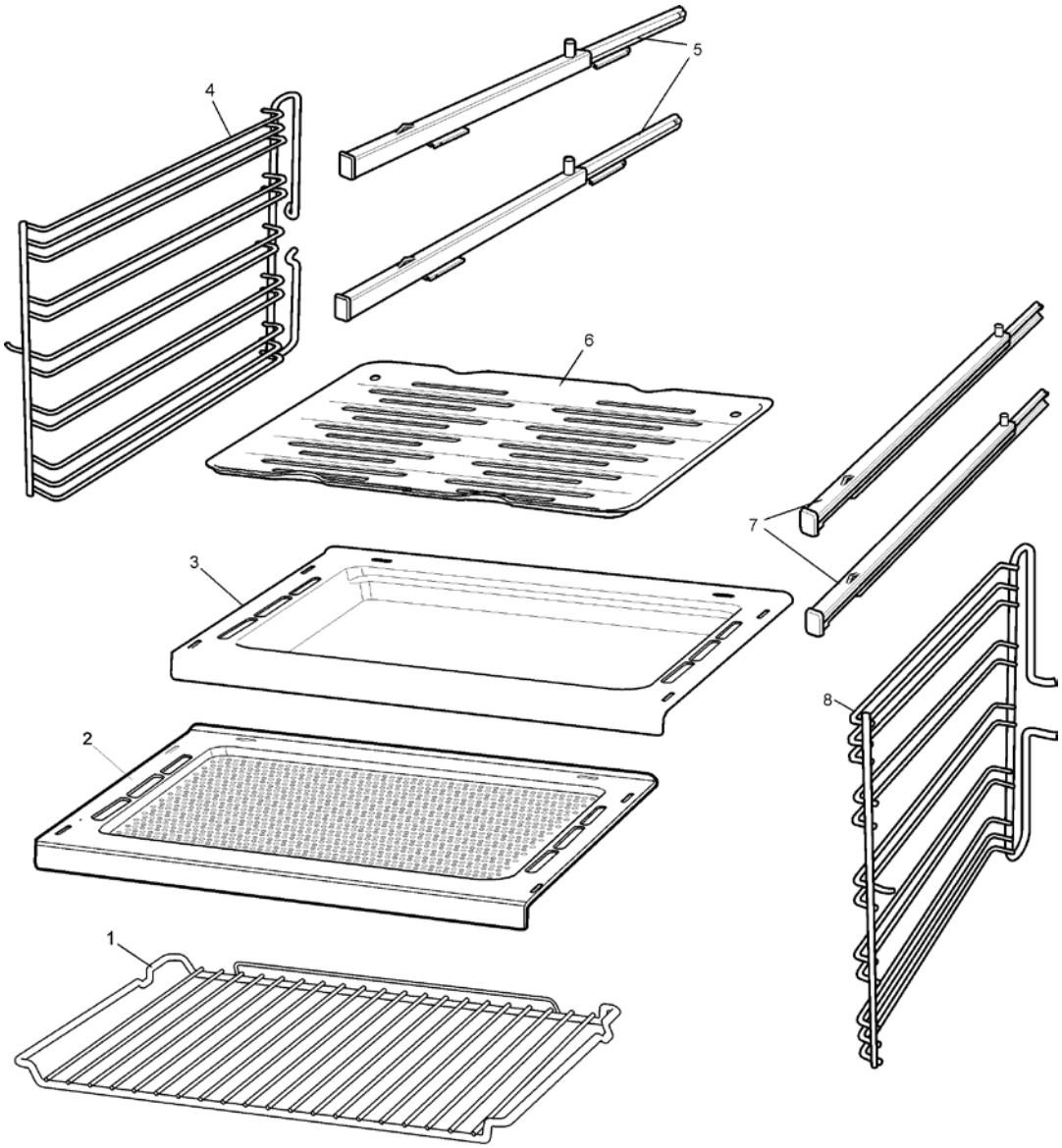
EX. VIEW DRAWING 8307
INTERNAL PACK